Thermosiphon Engine Heaters

EE Series Hazardous Location Single Phase

1500-5000 Watts

EE Model without thermostat

EE Model assembled with thermostat

Engine Displacement	Model Number without Thermostat	Model Number with Thermostat see chart 1	Volt	Watt	Phase	Amp
500cid or less 8.2L or less	EE115100-000	EE1151XX-000	120	1500	1	12.5
	EE115800-000	EE1158XX-000	208	1500	1	7.2
	EE115200-000	EE1152XX-000	240	1500	1	6.3
	EE115700-000	EE1157XX-000	277	1500	1	5.4
	EE115400-000	EE1154XX-000	480	1500	1	3.1
500 - 600cid 8.2 - 9.8L	EE120100-000	EE1201XX-000	120	2000	1	16.7
	EE120800-000	EE1208XX-000	208	2000	1	9.6
	EE120200-000	EE1202XX-000	240	2000	1	8.3
	EE120300-000	EE1203XX-000	380	2000	1	5.3
	EE120400-000	EE1204XX-000	480	2000	1	4.2
	EE120500-000	EE1205XX-000	575	2000	1	3.5
600 - 800cid 9.8 - 13.1L	EE125100-000	EE1251XX-000	120	2500	1	20.8
	EE125800-000	EE1258XX-000	208	2500	1	12.0
	EE125200-000	EE1252XX-000	240	2500	1	10.4
	EE125700-000	EE1257XX-000	277	2500	1	9.2
	EE125300-000	EE1253XX-000	380	2500	1	6.6
	EE125400-000	EE1254XX-000	480	2500	1	5.2
800 - 1000cid 13.1 - 16.4L	EE130100-000	EE1301XX-000	120	3000	1	25.0
	EE130800-000	EE1308XX-000	208	3000	1	14.4
	EE130200-000	EE1302XX-000	240	3000	1	12.5
	EE130700-000	EE1307XX-000	277	3000	1	10.8
	EE130400-000	EE1304XX-000	480	3000	1	6.3
	EE130500-000	EE1305XX-000	575	3000	1	5.2
1000 - 1350cid 16.4 - 22.1L	EE140800-000	EE1408XX-000	208	4000	1	19.2
	EE140200-000	EE1402XX-000	240	4000	1	16.7
	EE140700-000	EE1407XX-000	277	4000	1	14.4
	EE140400-000	EE1404XX-000	480	4000	1	8.3
1350 - 1650cid 22.1 - 27.0L	EE150800-000	EE1508XX-000	208	5000	1	24.0
	EE150200-000	EE1502XX-000	240	5000	1	20.8
	EE150700-000	EE1507XX-000	277	5000	1	18.1
	EE150400-000	EE1504XX-000	480	5000	1	10.4
	EE150500-000	EE1505XX-000	575	5000	1	8.7

CHART 1

Heaters with Thermostats

To specify temperature range of thermostat, insert numerical code from chart in place of the **XX** in model number.

Example:
Desired Temp. Range: 100° - 120°F
Model Number: EE1302**XX**-000
Order as: EE1302**10**-000

Temperature Range ON	Temperature Range OFF	Numerical Code
80°F (27C)	100°F (38C)	08
100°F (38C)	120°F (49C)	10
120°F (49C)	140°F (60C)	12

All heaters over 480V with a thermostat must use a control box. See Control Systems page 30.

EE Model

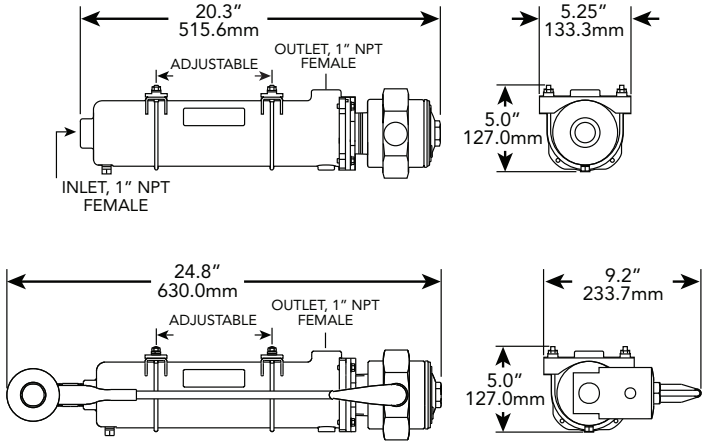

Replacement Parts

For thermosiphon engine heaters EE Series

Model Number without Thermostat	Model Number with Thermostat see chart 2	Element Replacement
EE115100-000	EE1151XX-000	REEE1151
EE115800-000	EE1158XX-000	REEE1158
EE115200-000	EE1152XX-000	REEE1152
EE115700-000	EE1157XX-000	REEE1157
EE115400-000	EE1154XX-000	E01541E-50NA-00
EE120100-000	EE1201XX-000	REEE1201
EE120800-000	EE1208XX-000	REEE1208
EE120200-000	EE1202XX-000	REEE1202
EE120300-000	EE1203XX-000	E02031E-50NA-00
EE120400-000	EE1204XX-000	E02041E-50NA-00
EE120500-000	EE1205XX-000	E02051E-50NA-00
EE125100-000	EE1251XX-000	REEE1251
EE125800-000	EE1258XX-000	REEE1258
EE125200-000	EE1252XX-000	REEE1252
EE125700-000	EE1257XX-000	REEE1257
EE125300-000	EE1253XX-000	E02531E-C0NA-00
EE125400-000	EE1254XX-000	E02541E-C0NA-00
EE130100-000	EE1301XX-000	REEE1301
EE130800-000	EE1308XX-000	REEE1308
EE130200-000	EE1302XX-000	REEE1302
EE130700-000	EE1307XX-000	REEE1307
EE130400-000	EE1304XX-000	E03041E-50NA-00
EE130500-000	EE1305XX-000	E03051E-50NA-00
EE140800-000	EE1408XX-000	REEE1408
EE140200-000	EE1402XX-000	REEE1402
EE140700-000	EE1407XX-000	REEE1407
EE140400-000	EE1404XX-000	E04041E-50NA-00
EE150800-000	EE1508XX-000	E05081E-50NA-00
EE150200-000	EE1502XX-000	E05021E-C0NA-00
EE150700-000	EE1507XX-000	E05071E-C0NA-00
EE150400-000	EE1504XX-000	E05041E-C0NA-00
EE150500-000	EE1505XX-000	E05051E-C0NA-00

Common Replacement Parts available for all listed heaters	
MI Cable	PRP104202-024
Tank	RTL
Flange	RF-L
Flange O-ring	TML-OR
Mounting Brackets	FK7
Check Valve	RV-M

CHART 2

Heaters with Thermostats

Temperature Range ON	Temperature Range OFF	Sensing Unit
80°F (27C)	100°F (38C)	RSU8
100°F (38C)	120°F (49C)	RSU10
120°F (49C)	140°F (60C)	RSU12

Example:

Model Number: EE1302**10**-000
T-Stat Replacement: RSU10

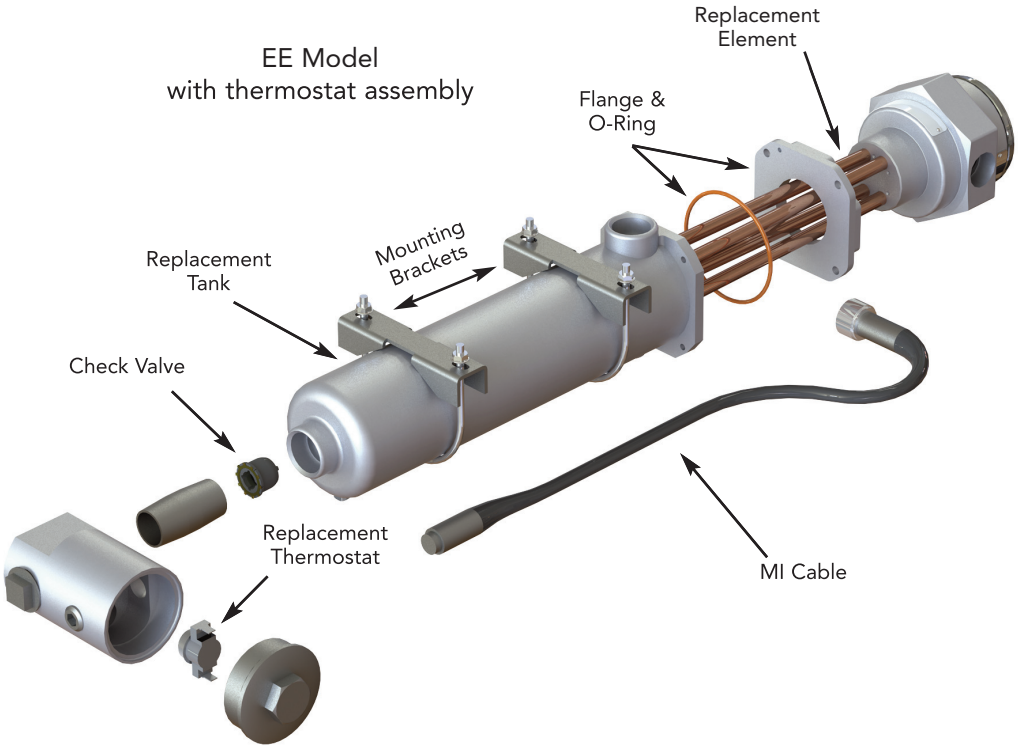

ADAPTER FITTINGS

For the use of 0.75" or 1" ID heater hose, hose barb adapters are available. See below.

HB-1	1" NPT to 1" hose barb adapter. Installs in 1" NPT female inlet or outlet of the heater.
HB-3/4	1" NPT to 0.75" hose barb adapter. Installs in 1" NPT female inlet or outlet of the heater.

Thermosiphon Engine Heaters

EE Series Hazardous Location Three Phase

1500-5000 Watts

EE Model without thermostat

EE Model assembled with thermostat

Engine Displacement	Model Number without Thermostat	Model Number with Thermostat see chart 1	Volt	Watts	Phase	Amp
500cid or less 8.2L or less	EE315800-000	EE3158XX-000	208	1500	3	4.2
	EE315200-000	EE3152XX-000	240	1500	3	3.6
	EE315400-000	EE3154XX-000	480	1500	3	1.8
500 - 600cid 8.2 - 9.8L	EE320800-000	EE3208XX-000	208	2000	3	5.6
	EE320200-000	EE3202XX-000	240	2000	3	4.8
	EE320300-000	EE3203XX-000	380	2000	3	3.0
	EE320400-000	EE3204XX-000	480	2000	3	2.4
	EE320500-000	EE3205XX-000	575	2000	3	2.0
600 - 800cid 9.8 - 13.1L	EE325800-000	EE3258XX-000	208	2500	3	6.9
	EE325200-000	EE3252XX-000	240	2500	3	6.0
	EE325300-000	EE3253XX-000	380	2500	3	3.8
	EE325400-000	EE3254XX-000	480	2500	3	3.0
	EE325500-000	EE3255XX-000	575	2500	3	2.5
800 - 1000cid 13.1 - 16.4L	EE330800-000	EE3308XX-000	208	3000	3	8.3
	EE330200-000	EE3302XX-000	240	3000	3	7.2
	EE330300-000	EE3303XX-000	380	3000	3	4.6
	EE330400-000	EE3304XX-000	480	3000	3	3.6
	EE330500-000	EE3305XX-000	575	3000	3	3.0
1000 - 1350cid 16.4 - 22.1L	EE340800-000	EE3408XX-000	208	4000	3	11.1
	EE340200-000	EE3402XX-000	240	4000	3	9.6
	EE340300-000	EE3403XX-000	380	4000	3	6.1
	EE340400-000	EE3404XX-000	480	4000	3	4.8
	EE340500-000	EE3405XX-000	575	4000	3	4.0
1350 - 1650cid 22.1 - 27.0L	EE350800-000	EE3508XX-000	208	5000	3	13.9
	EE350200-000	EE3502XX-000	240	5000	3	12.0
	EE350300-000	EE3503XX-000	380	5000	3	7.6
	EE350400-000	EE3504XX-000	480	5000	3	6.0
	EE350500-000	EE3505XX-000	575	5000	3	5.0

CHART 1

Heaters with Thermostats

To specify temperature range of thermostat, insert numerical code from chart in place of the **XX** in model number.

Example:
Desired Temp. Range: 100° - 120°F
Model Number: EE3302**XX**-000
Order as: EE3302**10**-000

Temperature Range ON	Temperature Range OFF	Numerical Code
80°F (27C)	100°F (38C)	08
100°F (38C)	120°F (49C)	10
120°F (49C)	140°F (60C)	12

All 3 phase heaters with thermostat must use a control box. See Control Systems page 30.

EE Model

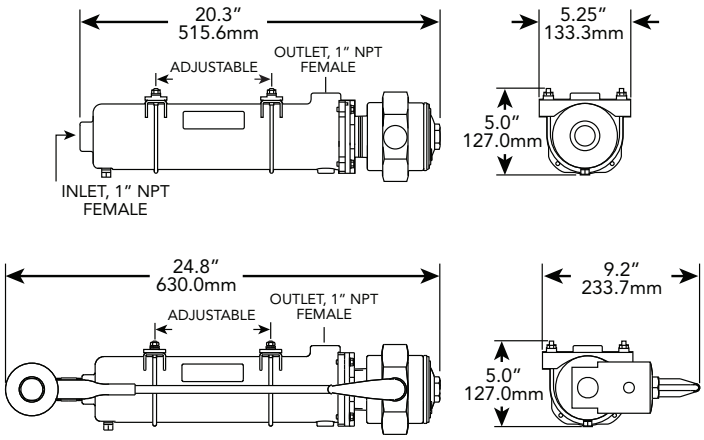

Model Number without Thermostat	Model Number with Thermostat see chart 2	Element Replacement
EE315800-000	EE3158XX-000	E01583E-15NA-00
EE315200-000	EE3152XX-000	E01523E-15NA-00
EE315400-000	EE3154XX-000	E01543E-15NA-00
EE320800-000	EE3208XX-000	E02083E-25NA-00
EE320200-000	EE3202XX-000	E02023E-25NA-00
EE320300-000	EE3203XX-000	E02033E-25NA-00
EE320400-000	EE3204XX-000	E02043E-25NA-00
EE320500-000	EE3205XX-000	E02053E-25NA-00
EE325800-000	EE3258XX-000	E02583E-30NA-00
EE325200-000	EE3252XX-000	E02523E-30NA-00
EE325300-000	EE3253XX-000	E02533E-30NA-00
EE325400-000	EE3254XX-000	E02543E-30NA-00
EE325500-000	EE3255XX-000	E02553E-30NA-00
EE330800-000	EE3308XX-000	E03083E-30NA-00
EE330200-000	EE3302XX-000	E03023E-30NA-00
EE330300-000	EE3303XX-000	E03033E-30NA-00
EE330400-000	EE3304XX-000	E03043E-30NA-00
EE330500-000	EE3305XX-000	E03053E-30NA-00
EE340800-000	EE3408XX-000	E04083E-50NA-00
EE340200-000	EE3402XX-000	E04023E-50NA-00
EE340300-000	EE3403XX-000	E04033E-50NA-00
EE340400-000	EE3404XX-000	E04043E-50NA-00
EE340500-000	EE3405XX-000	E04053E-50NA-00
EE350800-000	EE3508XX-000	E05083E-50NA-00
EE350200-000	EE3502XX-000	E05023E-50NA-00
EE350300-000	EE3503XX-000	E05033E-50NA-00
EE350400-000	EE3504XX-000	E05043E-50NA-00
EE350500-000	EE3505XX-000	E05053E-50NA-00

Common Replacement Parts available for all listed heaters	
MI Cable	PRP104202-024
Tank	RTL
Flange	RF-L
Flange O-ring	TML-OR
Mounting Brackets	FK7
Check Valve	RV-M

Replacement Parts

For thermosiphon engine heaters EE Series

CHART 2

Heaters with Thermostats

Temperature Range ON	Temperature Range OFF	Sensing Unit
80°F (27C)	100°F (38C)	RSU8
100°F (38C)	120°F (49C)	RSU10
120°F (49C)	140°F (60C)	RSU12

Example:

Model Number: EE3302**10**-000
T-Stat Replacement: RSU10

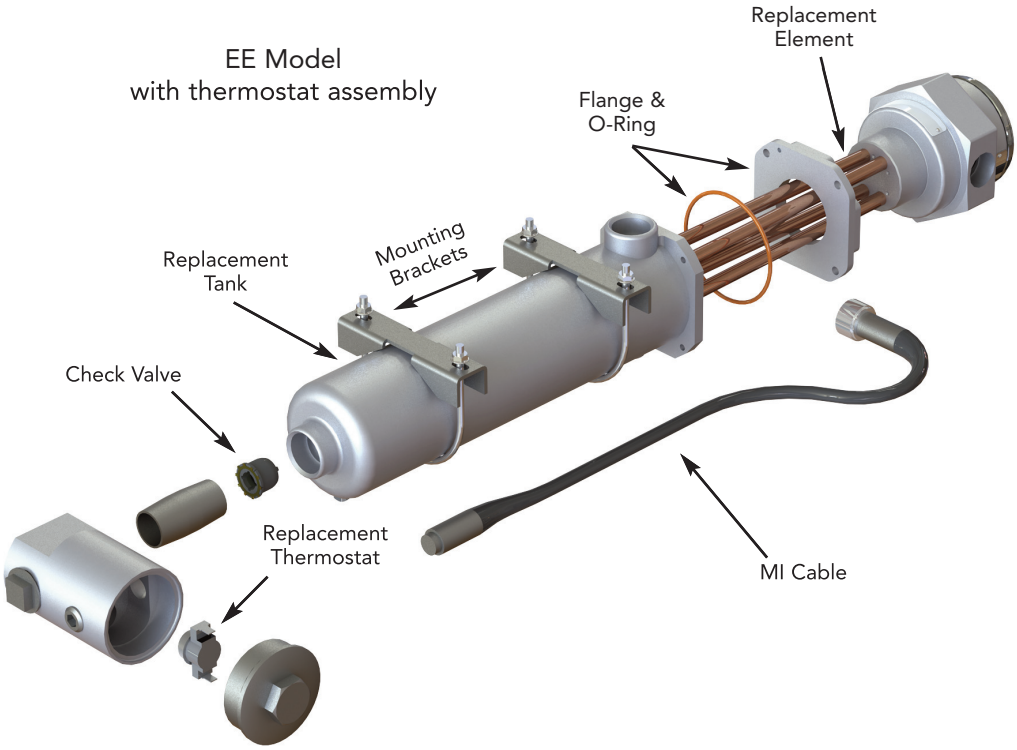

ADAPTER FITTINGS

For the use of 0.75" or 1" ID heater hose, hose barb adapters are available. See below.

HB-1	1" NPT to 1" hose barb adapter. Installs in 1" NPT female inlet or outlet of the heater.
HB-3/4	1" NPT to 0.75" hose barb adapter. Installs in 1" NPT female inlet or outlet of the heater.